CITY OF SAINT PAUL
HERITAGE PRESERVATION COMMISSION STAFF REPORT

FILE NAME: 662 Conway Street
INVENTORY NUMBER: RA-SPC-2427
DATE OF APPLICATION: March 9, 2018
APPLICANT: Kristen Sachwitz, All Energy Solar
OWNER: Erik Berger
DATE OF HEARING: April 12, 2018
HPC SITE/DISTRICT: Dayton's Bluff Heritage Preservation District
PERIOD OF SIGNIFICANCE: 1857-1930
CATEGORY: Building Permit WARD: 7 DISTRICT COUNCIL: 4
CLASSIFICATION: Contributing
STAFF INVESTIGATION AND REPORT: Allison Suhan
DATE: April 5, 2018

A. SITE DESCRIPTION:

The house at 662 Conway Street is a two story house with an enclosed front porch, wood lap siding, a contour block foundation, and a front gabled roof with paired double hung windows and eave returns. While a building permit index card could not be found, the 1983 survey indicates that the house was likely constructed around 1910, but could have possibly been moved to the site. The property is categorized as contributing to the Dayton's Bluff Heritage Preservation District.

B. PROPOSED CHANGES:

The applicant proposes to install two solar panel arrays consisting of 5 panels each (10 total panels) on the southwest elevation roof. Array 1 is sited at the front half of the roof plane while Array 2 is sited in the back half behind the dormer and chimney. Electrical equipment for the panels is proposed to be installed on the southwest elevation towards the rear of the property.

C. GUIDELINE CITATIONS:

The Secretary of the Interior's Standards for Rehabilitation

Citation	Meets Preservation Program	Comments
2. The historic character of a property will be retained and preserved. The removal of distinctive materials or alteration of features, spaces, and spatial relationships that characterize a property will be avoided.	YES	There will not be removal of any historic material.
9. New additions, exterior alterations or related new construction will not destroy historic materials, features and spatial relationships that characterize the property. The new work will be differentiated from the old and will be compatible with the historic materials, features, size, scale and proportion, and massing to protect the integrity of the property and its environment.	YES	There will not be removal of any historic material.
10. New additions and adjacent or related new construction will be undertaken in such a manner that, if removed in the future, the essential form and integrity of the historic property and its environment would be unimpaired.	YES	The installation of the solar panel arrays will maintain the essential form and integrity of the structure if removed.

Secretary of the Interior's Guidelines on Sustainability for Rehabilitating Historic Buildings (2011)

Solar Technology - Recommended

Citation	Meets Preservation Program	Comments
Considering on-site, solar technology only after implementing all appropriate treatments to improve energy efficiency of the building, which often have greater life-cycle cost benefit than on-site renewable energy.	NO	No information was provided outlining other energy efficiency efforts or studies.
Analyzing whether solar technology can be used successfully and will benefit a historic building without compromising its character or the character of the site or the surrounding historic district.	NO	An analysis was not provided.
Installing a solar device in a compatible location on the site or on a non-historic building or addition where it will have minimal impact on the historic building and its site.	NO	While solar array 2 meets this guideline because it is set back on the roof plane behind the dormer, solar array 1 does not meet this guideline as it impacts the site and is visible from the public right of way.
Installing a solar device on the historic building only after other locations have been investigated and determined infeasible.	NO	A study of other locations was not provided.
Installing a low-profile solar device on the historic building so that it is not visible or only minimally visible from the public right of way: for example, on a flat roof and set back to take advantage of a parapet or other roof feature to screen solar panels from view; or on a secondary slope of a roof, out of view from the public right of way.	NO	While solar array 2 meets this guideline because it is set back on the roof plane behind the dormer, solar array 1 does not meet this guideline as it impacts the site and is highly visible from the public right of way.
Installing a solar device on the historic building in a manner that does not damage historic roofing material or negatively impact the building's historic character and is reversible.	YES	The installation method does not damage historic material and is reversible.
Installing solar roof panels horizontally—flat or parallel to the roof—to reduce visibility.	YES	The solar panels will be parallel to the roof plane
Investigating off-site, renewable energy options when installing on-site solar devices would negatively impact the historic character of the building or site.	NO	A study was not provided.

Dayton's Bluff Heritage Preservation District - Sec. 74.87. General Principles

Citation	Meets Preservation Program	Comments
(4) New additions or alterations to structures should be constructed in such a manner that if such additions or alterations were to be removed in the future, the form and integrity of the original structure would be unimpaired.	YES	The installation of the solar panel arrays will maintain the essential form and integrity of the structure if removed.

(5) The impact of alterations or additions on individual buildings as well as on the surrounding streetscape will be considered; major alterations to buildings which occupy a corner lot or are otherwise prominently sited should be avoided.	NO	Solar Array 1 will have a visual impact on the surrounding streetscape as it is highly visible from the public right of way.

Dayton's Bluff Heritage Preservation District - Sec. 74.90. New Construction and Additions

Citation	Meets Preservation Program	Comments
(d)(1) Roof hardware such as skylights, vents and metal pipe chimneys should not be placed on the front roof plane.	NO	Solar Array 1 is proposed on the front half of the roof plane.

D. FINDINGS:

1. On July 23, 1992, the Dayton's Bluff Heritage Preservation District was established under Ordinance No. 17942 (Council File #92-900). The Heritage Preservation Commission shall protect the architectural character of heritage preservation sites through review and approval or denial of applications for city permits for exterior work within designated heritage preservation sites §73.04.(4).
2. 662 Conway Street is categorized as contributing to the Dayton's Bluff Heritage Preservation District.
3. The Secretary of the Interior (SOI) Standards state that *the historic character of a property will be retained and preserved. The removal of distinctive materials or alteration of features, spaces, and spatial relationships that characterize a property will be avoided.* There will not be removal of any historic material, thus meeting the standard.
4. The SOI Standards state that *new additions, exterior alterations or related new construction will not destroy historic materials, features and spatial relationships that characterize the property. The new work will be differentiated from the old and will be compatible with the historic materials, features, size, scale and proportion, and massing to protect the integrity of the property and its environment.* There will not be removal of any historic material, thus meeting the standard.
5. The SOI Standards state that *new additions and adjacent or related new construction will be undertaken in such a manner that, if removed in the future, the essential form and integrity of the historic property and its environment would be unimpaired.* The installation of the solar panel arrays will maintain the essential form and integrity of the structure if removed, thus meeting the standard.
6. The SOI Guidelines on Sustainability for Rehabilitating Historic Buildings recommend *considering on-site, solar technology only after implementing all appropriate treatments to improve energy efficiency of the building, which often have greater life-cycle cost benefit than on-site renewable energy.* No information was provided outlining other energy efficiency efforts or studies, thus it does not meet the guideline.
7. The SOI Standards recommend *analyzing whether solar technology can be used successfully and will benefit a historic building without compromising its character or the character of the site or the surrounding historic district.* An analysis was not provided, thus it does not meet the guideline.
8. The SOI Guidelines on Sustainability for Rehabilitating Historic Buildings recommend *installing a solar device in a compatible location on the site or on a non-historic building or addition where it will have minimal impact on the historic building and its site.* While solar array 2 meets this guideline because it is set back on the roof plane behind the dormer, solar array 1 does not meet this guideline as it impacts the site and is visible from the public right of way, thus it does not meet the guideline.
9. The SOI Guidelines on Sustainability for Rehabilitating Historic Buildings recommend *installing a solar device on the historic building only after other locations have been investigated and determined infeasible.* A study of other locations was not provided, thus it does not meet the guideline.
10. The SOI Guidelines on Sustainability for Rehabilitating Historic Buildings recommend *installing a low-profile solar device on the historic building so that it is not visible or only minimally visible from the public right of*

way: for example, on a flat roof and set back to take advantage of a parapet or other roof feature to screen solar panels from view; or on a secondary slope of a roof, out of view from the public right of way. While solar array 2 meets this guideline because it is set back on the roof plane behind the dormer, solar array 1 does not meet this guideline as it impacts the site and is highly visible from the public right of way, thus it does not meet the guideline.

11. The SOI Guidelines on Sustainability for Rehabilitating Historic Buildings recommend *installing a solar device on the historic building in a manner that does not damage historic roofing material or negatively impact the building's historic character and is reversible.* The installation method does not damage historic material and is reversible, thus it meets the guideline.
12. The SOI Guidelines on Sustainability for Rehabilitating Historic Buildings recommend *installing solar roof panels horizontally—flat or parallel to the roof—to reduce visibility.* The solar panels will be parallel to the roof plane, thus it meets the guideline.
13. The SOI Guidelines on Sustainability for Rehabilitating Historic Buildings recommend *investigating off-site, renewable energy options when installing on-site solar devices would negatively impact the historic character of the building or site.* A study was not provided, thus it does not meet the guideline.
14. ***Sec. 74.87(4)*** *New additions or alterations to structures should be constructed in such a manner that if such additions or alterations were to be removed in the future, the form and integrity of the original structure would be unimpaired.* The installation of the solar panel arrays will maintain the essential form and integrity of the structure if removed, thus it meets the guideline.
15. ***Sec. 74.87*** *(5) The impact of alterations or additions on individual buildings as well as on the surrounding streetscape will be considered; major alterations to buildings which occupy a corner lot or are otherwise prominently sited should be avoided.* Solar Array 1 will have a visual impact on the surrounding streetscape as it is highly visible from the public right of way, thus it does not meet the guideline.
16. ***Sec. 74.90****(d)(1) Roof hardware such as skylights, vents and metal pipe chimneys should not be placed on the front roof plane.* Solar Array 1 is proposed on the front half of the roof plane, thus it does not meet the guideline.
17. The proposed solar panel array installation at 662 Conway Street will adversely impact the Program for the Preservation and architectural control for the Dayton's Bluff Heritage Preservation District (Leg. Code §73.06 (e)).

E. STAFF RECOMMENDATIONS: Based on the findings, staff recommends denial of the building permit as proposed.

F. SUGGESTED MOTION

I move to deny application #18-019 for the installation of a solar panel array as per the findings of fact, presented testimony, submitted documentation and information provided in the staff report.

I. ATTACHMENTS

1. HPC Application
2. Submitted Plans
3. Photos of the property
4. Staff Communication with Applicant

Project Address:
662 CONWAY ST

Saint Paul Heritage Preservation Commission
Department of Planning and Economic Development
25 Fourth Street West, Suite 1400
Saint Paul, MN 55102
Phone: (651) 266-9078
ApplyHPC@stpaul.gov

Heritage Preservation Commission Design Review Application

PROCESS

This application must be completed in addition to required city permit applications for individually designated Heritage Preservation Sites and properties located within Heritage Preservation Districts.

Design review applications are reviewed and approved by either heritage preservation staff or the Heritage Preservation Commission (HPC) at a public hearing. HPC staff are authorized to approve work that complies with adopted design review guidelines and preservation programs, available at our website www.stpaul.gov/hpc, while the HPC reviews projects that are significant alterations, demolitions, additions, new construction or proposals that do not comply with HPC guidelines. The decision of whether a proposal may be reviewed and approved by HPC staff or must be reviewed by the HPC at a public hearing is made once a complete application is submitted.

The HPC public hearing schedule is viewable here:
https://www.stpaul.gov/departments/planning-economic-development/heritage-preservation/heritage-preservation-commission

A complete application consists of:
1) An application form
2) Required attachments that adequately describe the proposed work (see attached checklist)

An incomplete application will be put on hold and staff will contact you for additional information. If an application is incomplete for 30 days after it was received, it will be returned to the applicant.

Complete applications will be reviewed in the order they are received. **Applications are not entered in queue to be reviewed until staff has determined them to be complete.** Once reviewed, a Certificate of Approval will be issued along with any conditions for the proposed work. You will be notified by staff when the Certificate of Approval has been issued and a copy will be sent to the Department of Safety and Inspections (DSI) to complete the HPC process of obtaining the necessary permit(s).

1. CATEGORY

Please check the category that best describes the proposed work

- ☐ Repair/Rehabilitation
- ☐ Moving
- ☐ Demolition
- ☐ Sign/Awning
- ☐ Fence/Retaining Wall
- ☒ Other Solar PV system
- ☐ New Construction/Addition/ Alteration
- ☐ Pre-Application Review Only

2. PROJECT ADDRESS

Street and number: 662 CONWAY ST Zip Code: 55106

3. APPLICANT INFORMATION

Name of contact person: Kristen Sachwitz

Company: All Energy Solar

Street and number: 1642 Carroll Ave

City: St. Paul State: MN Zip Code: 55104

Phone number: 651-888-4173 e-mail: kristensaes@gmail.com

4. PROPERTY OWNER(S) INFORMATION (If different from applicant)

Name: Erik Berger

Street and number: 662 Conway St

City: St. Paul State: MN Zip Code: 55106

Phone number: (612) 567-1529 e-mail: erik.allen.berger@gmail.com

5. PROJECT ARCHITECT (If applicable)

Contact person: _____

Company: _____

Street and number: _____

City: _____ State: _____ Zip Code: _____

Phone number: _____ e-mail: _____

6. PROJECT DESCRIPTION

Completely describe ALL exterior changes being proposed for the property. Include description of affected existing exterior features and changes to architectural details such as windows, doors, siding, railings, steps, trim, roof, foundation or porches. Attach specifications for doors, windows, lighting and other features, if applicable, including color and material samples.

Installation of a flush, roof-mounted solar PV system.

Total Project Value:	3739	*Attach additional sheets if necessary*

7. ATTACHMENTS & DESIGN REVIEW CHECKLIST

Please refer to the following checklist section(s) that relate to your proposed scope of work and check next to the items that are attached to your application. Attach all checked items listed to this application or attach in an email to ApplyHPC@stpaul.gov

Staff may contact you for additional information or materials.

If your project or work type is not included in this checklist, please contact the staff by calling 651-266-9078 or sending an e-mail to applyhpc@stpaul.gov for assistance on how to complete an application.

Applicant Submitted	*Staff Received*	*Date Received*	
			Restoration /Repair/Rehabilitation
☐	☐		Three (3) copies of scaled and dimensioned plans which note all materials, finishes, and dimensions on plan (2 copies will be forwarded to the Dept. of Safety and Inspections).
☐	☐		Photographs of all features and areas affected by proposed work.
☐	☐		If an existing architectural feature is being replaced, please provide detailed drawings of the existing feature.
☐	☐		Historic photographs (if any) that inform the restoration/rehabilitation/repair work.
			Sign/Awning:
☐	☐		Photographs of location of proposed signage on structure/property.
☐	☐		Photographs of structure and all exterior sides affected by proposed work.
☐	☐		Three (3) copies of plans that note materials, dimensions, colors, and method of attachment.
☐	☐		Section drawing showing point of installation, method of installation, awning profile and projection.
☐	☐		Illumination plan.
☐	☐		Photographs or elevation of the building showing location of proposed sign in relation to the building and, if applicable, other signage on the building.
			New Construction/Addition/Exterior Alteration:
☐	☐		Three (3) copies of construction level plans which note all materials, finishes, and dimensions on plan (2 copies will be forwarded to the Dept. of Safety and Inspections). Show how the addition(s) relates to the existing structure.
☐	☐		Photographs of all features and areas affected by proposed work.
☐	☐		Site plan showing lot dimensions, location of any existing buildings, and proposed addition(s), elevation plans, section and detail drawings as necessary. All plans must be scaled and dimensioned.
☐	☐		Digital copies of the plans and photos submitted on CD or USB.

Applicant Submitted	Staff Received	Date Received	
			Fencing/Retaining Wall:
☐	☐		A site plan showing the location of the fence/wall in relation to property lines and any structures with measurements.
☐	☐		An elevation drawing or photo of the proposed fence/wall.
			Roofing:
✓	☐		Sample or description of existing material(s).
✓	☐		Sample or specifications of proposed material(s).
✓	☐		Sample colors.
✓	☐		Photographs of all exterior sides affected by the proposed work.
✓	☐		Photographs of the building and roof showing existing conditions of roof, coping, flashing, affected masonry, parapet, siding, existing skylights, and/or dormers. Also include any other critical intersections where the roof meets the historic fabric, and sightline drawings when a change in slope or other potentially visible change is proposed.
			Heating, Ventilating, and Air Conditioning Equipment
☐	☐		Site plan showing location of condenser in relation to the building(s) and property lines.
☐	☐		Photographs of the proposed location of any condensers or venting.
☐	☐		Photographs demonstrating that the proposed unit is not visible from the street.
☐	☐		A screening plan if a condenser is in the side yard.
☐	☐		Drawing or photograph demonstrating where and how conduit will be attached to the building.
			Window/Sash Replacement:
☐	☐		Statement describing in detail why windows need replacement as well as a description of weatherization efforts and copy of window repair estimates.
☐	☐		Existing window design and dimensions.
☐	☐		Proposed window design, dimensions, and manufacturer's specifications including shop drawings.
☐	☐		Existing type of exterior storm windows.
☐	☐		Proposed style of exterior storm windows.
☐	☐		Existing exterior window trim material.
☐	☐		Proposed exterior window trim material and style.
☐	☐		Photographs of all exterior sides where window replacement is being proposed.
☐	☐		Photographs of existing features/conditions which support window replacement proposal.

Applicant Submitted	*Staff Received*	*Date Received*	**Other Items Requested by HPC Staff:**
☐	☐		
☐	☐		
☐	☐		
☐	☐		
☐	☐		

Will any federal money be used in this project? **YES** ☐ **NO** ■

Are you applying for the Investment Tax Credits? **YES** ☐ **NO** ■

I, the undersigned, understand that the Design Review Application is limited to the aforementioned work to the affected property. I further understand that any additional exterior work to be done under my ownership must be submitted by application to the St. Paul Heritage Preservation Commission. Any unauthorized work will be required to be removed.

Signature of applicant: DocuSigned by: Kristen Sachwitz 27137EA8B8A0432... **Date:** 3/6/2018

Typed name of applicant: Kristen Sachwitz

Signature of owner: DocuSigned by: 3B42DBB56EBF4F1... **Date:** 3/6/2018

Typed name of owner: Erik Berger

Send completed application with the necessary attachments to ApplyHPC@stpaul.gov or to:

Saint Paul Heritage Preservation Commission
Department of Planning and Economic Development
25 Fourth Street West, Suite 1400
Saint Paul, MN 55102

You may also click the button below to attach the completed application to an email that will go directly to ApplyHPC@stpaul.gov . **Please attach supporting documents to the email** as well.

Submit Application

FOR HPC OFFICE USE ONLY

Address: 662 CONWAY ST

Date received: _____

Date complete: _____

FILE NO. _____

City Permit # ____ - _____

District:_____/Individual Site:_____

Pivotal/Contributing/Non-contributing/New Construction/Parcel

☐ Requires staff review

Supporting data: **YES** **NO**
Complete application: **YES** **NO**

The following condition(s) must be met in order for application to conform to preservation program:

It has been determined that the work to be performed pursuant to the application does not adversely affect the program for preservation and architectural control of the heritage preservation district or site (Ch.73.06).

_____
HPC staff approval

Date _____

☐ Requires Commission review

Submitted:

- ❑ 3 Sets of Plans
- ❑ 15 Sets of Plans reduced to 8 ½" by 11" or 11" by 17"
- ❑ Photographs
- ❑ CD of Plans (pdf) & Photos (jpg)
- ❑ City Permit Application
- ❑ Complete HPC Design Review application

Hearing Date set for: _____

HPC Staff Notes

MAR 0 9 2018

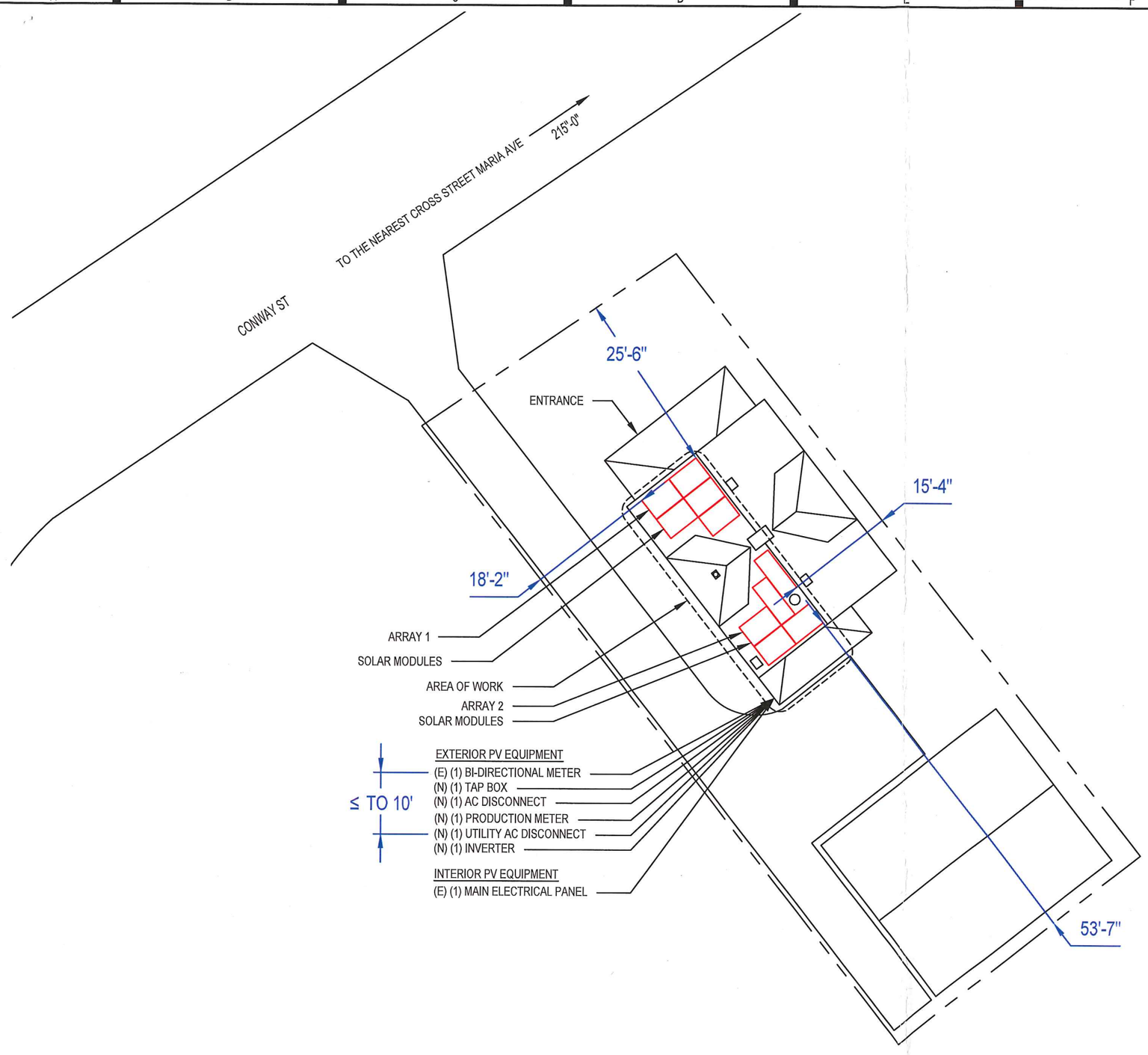

01 SITE PLAN

1/16" = 1'-0"

0 8' 16'

N W E S

GENERAL NOTES

1. FIELD VERIFY ALL MEASUREMENTS
2. ITEMS BELOW MAY NOT BE ON THIS PAGE
3. NO SPECIAL ACCESS INSTRUCTIONS
4. THERE ARE NO CLEARANCE ISSUES DUE TO OVERHEAD POWERLINES
5. UTILITY AC DISCONNECT AND PV PRODUCTION METER ARE LOCATED TOGETHER IN A READILY ACCESSIBLE LOCATION WITHIN 10' OF THE MAIN SERVICE METER
6. 24/7 UNESCORTED KEYLESS ACCESS SHALL BE PROVIDED FOR THE UTILITY METERS AND AC DISCONNECT

DISTANCES

PV SOLAR PANELS - OPTIMIZERS: 2' MAX
OPTIMIZERS - INVERTER: 50' MAX
INVERTER - UTILITY AC DISCONNECT: 2'
UTILITY AC DISCONNECT - PRODUCTION METER: 2'
PRODUCTION METER - BI-DIRECTIONAL METER: 2'

——————— PROPERTY LINE

(E) EXISTING

(N) NEW

ALL ENERGY | SOLAR |

CONTRACTOR

ALL ENERGY SOLAR

PHONE: 8006203370
ADDRESS: 1642 CARROLL AVE
ST PAUL, MN 55104

NEW PV SYSTEM: 3.950 kWp

ERIK BERGER
- 20586

662 CONWAY ST
ST PAUL, MN 55106
APN: 322922410076

ENGINEER OF RECORD

ACCOUNT#: ERIK BERGER
PREMISE #: 302818102
METER #: 90808037
OID #: 3284705

PAPER SIZE: 11" x 17" (ANSI B)

SITE PLAN

DATE: 2.6.2018

DESIGN BY: O.K.

CHECKED BY: M.M.

REVISIONS

A-101.00
(SHEET 3)

GENERAL NOTES

1. FIELD VERIFY ALL MEASUREMENTS
2. ITEMS BELOW MAY NOT BE ON THIS PAGE
3. NO SPECIAL ACCESS INSTRUCTIONS

(A) MODULE STRINGING

(E) EXISTING

(N) NEW

MIN STRING LENGTH: 8
MAX STRING LENGTH: 14

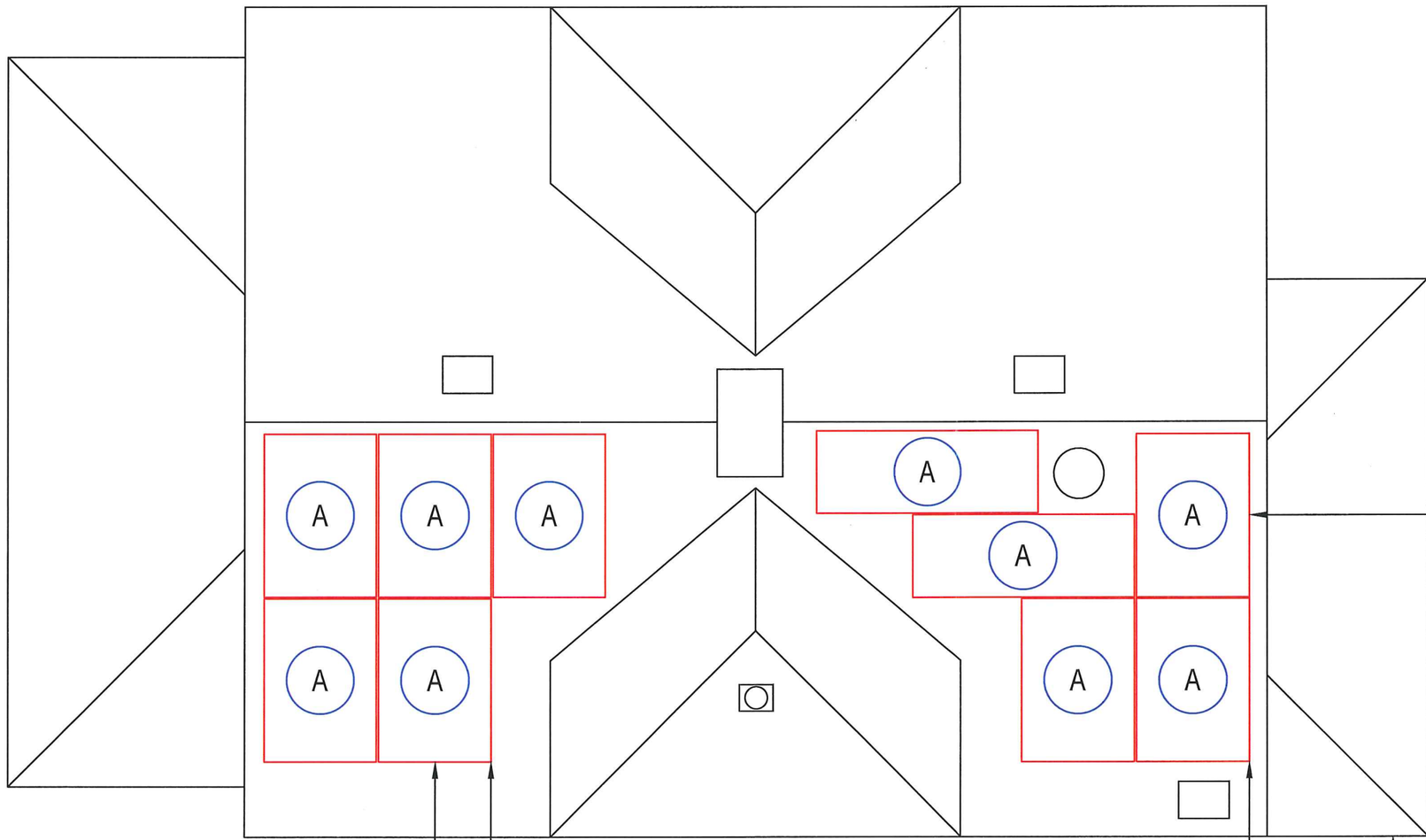

ARRAY 2 - 1.975 kW
[x5] (N) MODULES
TILT: 43 DEGREES
ROOF PITCH: 11:12
AZIMUTH: 232 DEGREES

ARRAY 1 - 1.975 kW
[x5] (N) MODULES
TILT: 43 DEGREES
ROOF PITCH: 11:12
AZIMUTH: 232 DEGREES

(N) (1) SOLADECK JUNCTION BOX

(N) (1) SOLADECK JUNCTION BOX

EXTERIOR PV EQUIPMENT
(E) (1) BI-DIRECTIONAL METER
(N) (1) TAP BOX
(N) (1) AC DISCONNECT
(N) (1) PRODUCTION METER
(N) (1) UTILITY AC DISCONNECT
(N) (1) INVERTER

INTERIOR PV EQUIPMENT
(E) (1) MAIN ELECTRICAL PANEL

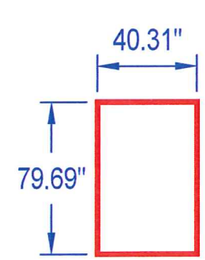

MODULE:
LG ELECTRONICS
LG395N2W-A5
395 WATTS

01 ELECTRICAL PLAN

1/4" = 1'

0 2' 4'

N E S W

ALL ENERGY SOLAR

CONTRACTOR

ALL ENERGY SOLAR

PHONE: 8006203370
ADDRESS: 1642 CARROLL AVE
ST PAUL, MN 55104

NEW PV SYSTEM: 3.950 kWp

ERIK BERGER
- 20586

662 CONWAY ST
ST PAUL, MN 55106
APN: 322922410076

ENGINEER OF RECORD

PAPER SIZE: 11" x 17" (ANSI B)

ELECTRICAL PLAN

DATE: 2.6.2018

DESIGN BY: O.K.

CHECKED BY: M.M.

REVISIONS

A-102.00
(SHEET 4)

GENERAL NOTES

1. FIELD VERIFY ALL MEASUREMENTS
2. ITEMS BELOW MAY NOT BE ON THIS PAGE
3. NO SPECIAL ACCESS INSTRUCTIONS
4. THERE ARE NO CLEARANCE ISSUES DUE TO OVERHEAD POWERLINES
5. UTILITY AC DISCONNECT AND PV PRODUCTION METER ARE LOCATED TOGETHER IN A READILY ACCESSIBLE LOCATION WITHIN 10' OF THE MAIN SERVICE METER
6. 24/7 UNESCORTED KEYLESS ACCESS SHALL BE PROVIDED FOR THE UTILITY

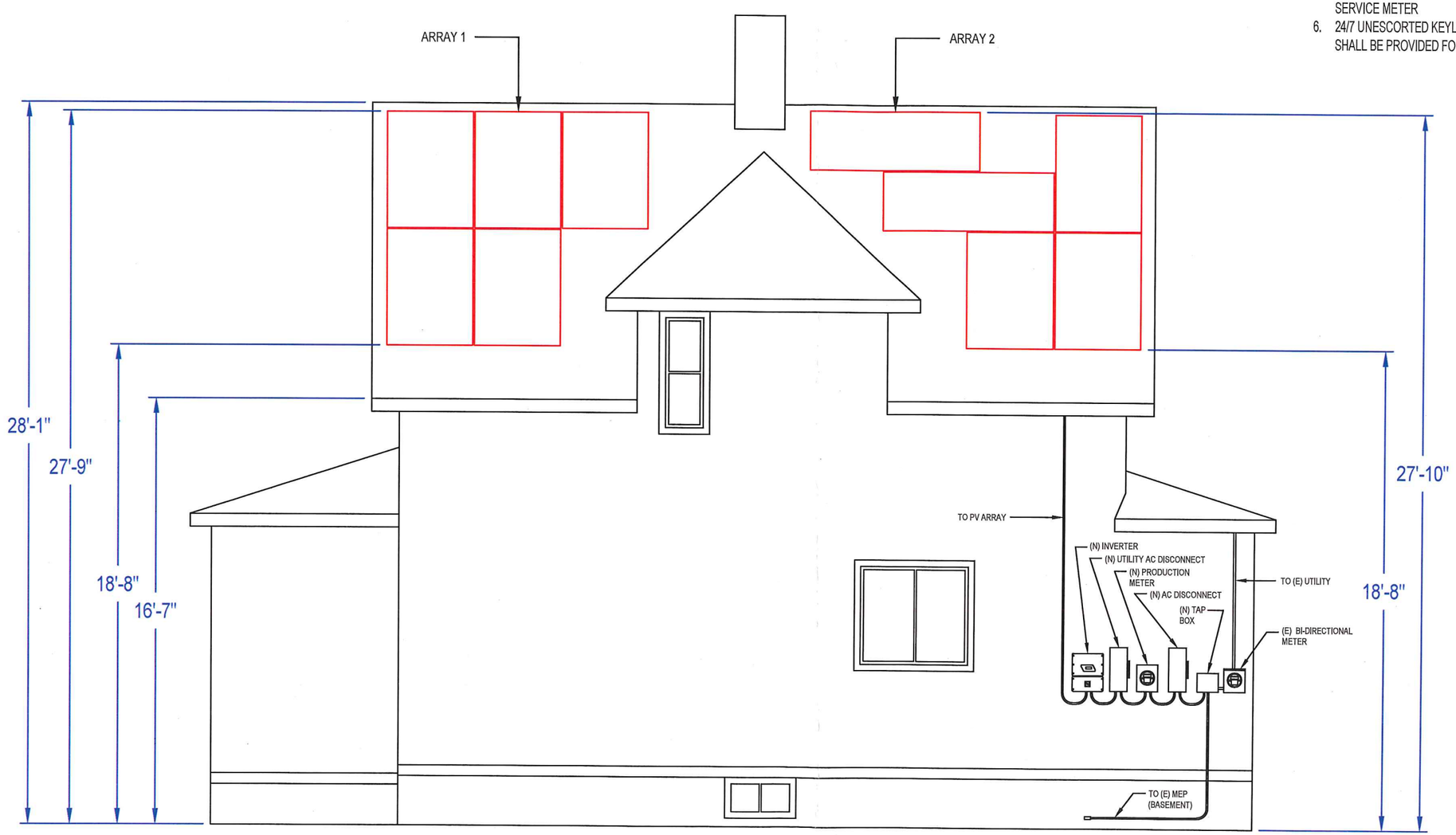

01 BUILDING ELEVATION (SW SIDE VIEW)

NOT TO SCALE

ALL ENERGY | SOLAR |

CONTRACTOR

ALL ENERGY SOLAR

PHONE: 8006203370
ADDRESS: 1642 CARROLL AVE
ST PAUL, MN 55104

NEW PV SYSTEM: 3.950 kWp

ERIK BERGER - 20586

662 CONWAY ST
ST PAUL, MN 55106
APN: 322922410076

ENGINEER OF RECORD

PAPER SIZE: 11" x 17" (ANSI B)

ELEVATION PLAN

DATE: 2.6.2018
DESIGN BY: O.K.
CHECKED BY: M.M.

REVISIONS

A-104.00

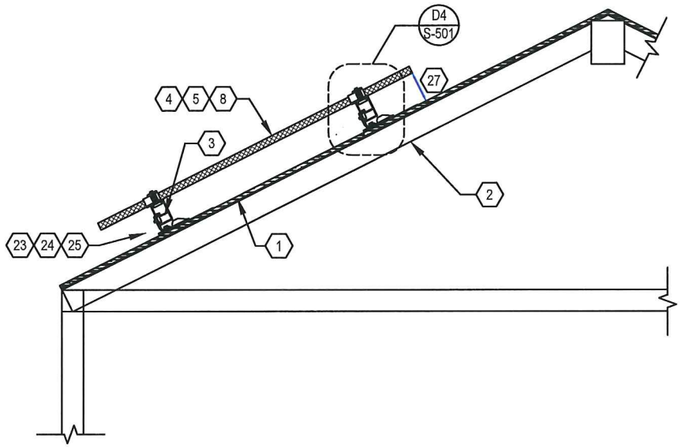

D1 RACKING DETAIL (TRANSVERSE)

NOT TO SCALE

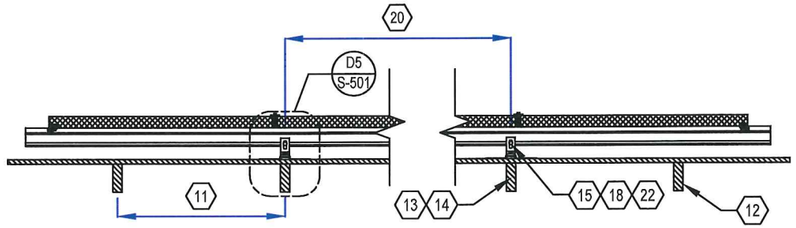

D2 RACKING DETAIL (LONGITUDINAL)

NOT TO SCALE

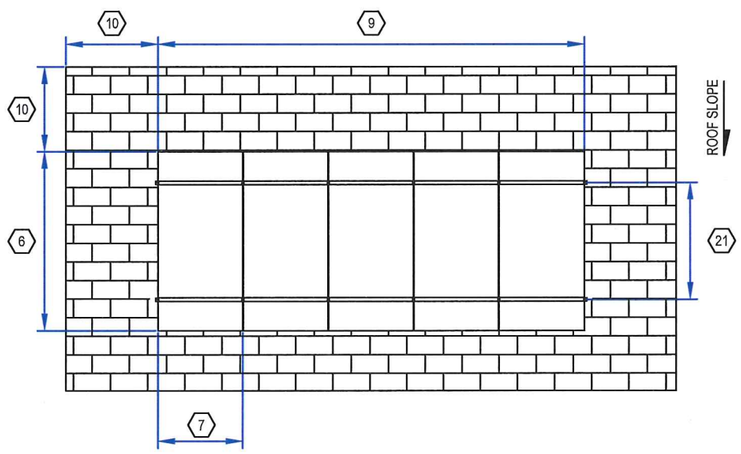

D3 RACKING DETAIL (TOP)

NOT TO SCALE

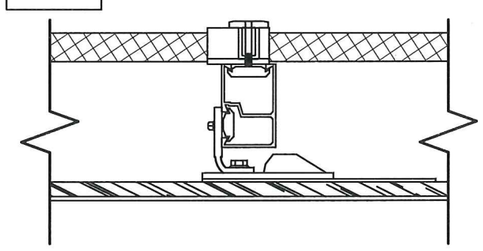

D4 DETAIL (TRANSVERSE)

NOT TO SCALE

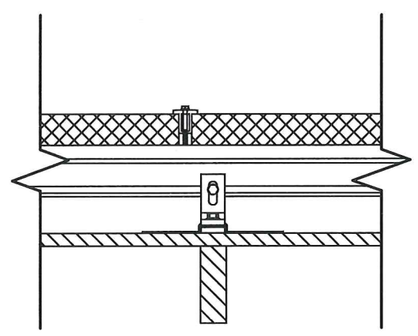

D5 DETAIL (LONGITUDINAL)

NOT TO SCALE

GENERAL NOTES

1. FIELD VERIFY ALL MEASUREMENTS

SHEET KEYNOTES

1. ROOF MATERIAL: ASPHALT SHINGLE
2. ROOF STRUCTURE: SINGLE SPAN RAFTER
3. ATTACHMENT TYPE: SNAP N RACK FLASHED L-FOOT
4. MODULE MANUFACTURER: LG ELECTRONICS
5. MODULE MODEL: LG395N2W-A5
6. MODULE LENGTH: 79.69 IN.
7. MODULE WIDTH: 40.31 IN.
8. MODULE WEIGHT: 47.84 LBS.
9. SEE SHEET A-103 FOR DIMENSION(S)
10. MIN. FIRE OFFSET: NO FIRE CODE ENFORCED
11. RAFTER SPACING: 16 IN. O.C.
12. RAFTER SIZE: 2x4 NOMINAL
13. LAG BOLT DIAMETER: 5/16 IN.
14. LAG BOLT EMBEDMENT: 2 IN.
15. TOTAL # OF ATTACHMENTS: 37
16. TOTAL AREA: 223.08 SQ. FT.
17. TOTAL WEIGHT: 555.63 LBS.
18. WEIGHT PER ATTACHMENT: 15.02 LBS.
19. DISTRIBUTED LOAD: 2.49 PSF.
20. MAX. HORIZONTAL STANDOFF: 48 IN.
21. MAX. VERTICAL STANDOFF:
LANDSCAPE: 26 IN., PORTRAIT: 33 IN.
22. STANDOFF STAGGERING: YES
23. RAIL MANUFACTURER (OR EQUIV.): SNAP N RACK
24. RAIL MODEL (OR EQUIVALENT): SERIES 100
25. RAIL WEIGHT: 0.75 PLF.
26. MAX. RAFTER SPAN: 9 FT.
27. MODULE CLEARANCE: 3 IN. MIN., 6 IN. MAX.

ALL ENERGY SOLAR

CONTRACTOR

ALL ENERGY SOLAR

PHONE: 8006203370
ADDRESS: 1642 CARROLL AVE
ST PAUL, MN 55104

NEW PV SYSTEM: 3.950 kWp

ERIK BERGER - 20586

662 CONWAY ST
ST PAUL, MN 55106
APN: 322922410076

ENGINEER OF RECORD

PAPER SIZE: 11" x 17" (ANSI B)

ASSEMBLY DETAILS

DATE: 2.6.2018
DESIGN BY: O.K.
CHECKED BY: M.M.

REVISIONS

S-501.00
(SHEET 11)

LG
Life's Good

Innovation for
a Better Life

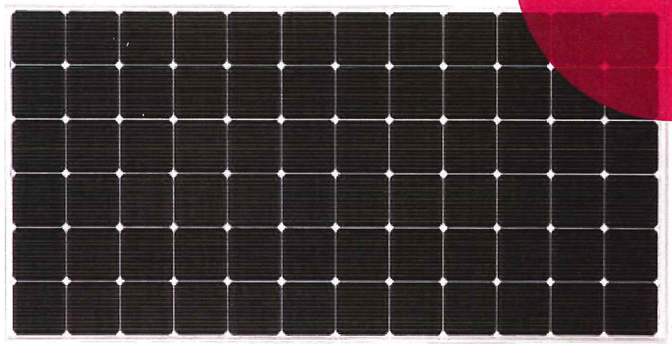

LG NeON™ 2 72cell

LG410N2W-A5 | LG405N2W-A5 | LG400N2W-A5 | LG395N2W-A5

72 cell

LG's new module, LG NeON™ 2, adopts Cello technology. Cello technology replaces 3 busbars with 12 thin wires to enhance power output and reliability. LG NeON™ 2 demonstrates LG's efforts to increase customer's value beyond efficiency. It features enhanced warranty, durability, performance under real environment, and aesthetic design suitable for roofs.

Intertek

APPROVED PRODUCT MCS Photovoltaic Modules

Enhanced Performance Warranty

LG NeON™ 2 has an enhanced performance warranty. The annual degradation has fallen from -0.6%/yr to -0.55%/yr. Even after 25 years, the cell guarantees 1.2%p more output than the previous LG NeON™ 2 modules.

High Power Output

Compared with previous models, the LG NeON™ 2 has been designed to significantly enhance its output efficiency, thereby making it efficient even in limited space.

Aesthetic Roof

LG NeON™ 2 has been designed with aesthetics in mind; thinner wires that appear all black at a distance. The product may help increase the value of a property with its modern design.

Outstanding Durability

With its newly reinforced frame design, LG has extended the warranty of the LG NeON™ 2 for an additional 2 years. Additionally, LG NeON™ 2 can endure a front load up to 5400 Pa, and a rear load up to 4300 Pa.

Better Performance on a Sunny Day

LG NeON™ 2 now performs better on sunny days thanks to its improved temperature coefficiency.

Double-Sided Cell Structure

The rear of the cell used in LG NeON™ 2 will contribute to generation, just like the front; the light beam reflected from the rear of the module is reabsorbed to generate a great amount of additional power.

About LG Electronics

LG Electronics is a global player who has been committed to expanding its operations with the solar market. The company first embarked on a solar energy source research programs in 1985, supported by LG Group's vast experience in the semi-conductor, LCD, chemistry, and materials industries. In 2010, LG Solar successfully released its first Mono X® series to the market, which is now available in 32 countries. The LG NeON™ (previously known as Mono X® NeON) and the LG NeON™2 won the "Intersolar Award" in 2013 and 2015, which demonstrates LG Solar's lead, innovations and commitment to the industry.

LG NeON™ 2 72cell LG410N2W-A5 | LG405N2W-A5 | LG400N2W-A5 | LG395N2W-A5

Mechanical Properties

Cells	6 x 12
Cell Vendor	LG
Cell Type	Monocrystalline / N-type
Cell Dimensions	161.7 x 161.7 mm / 6 inches
# of Busbar	12 (Multi Wire Busbar)
Dimensions (L x W x H)	2024 x 1024 x 40 mm 79.69 x 40.31 x 1.57 inch
Front Load	5400Pa
Rear Load	4300Pa
Weight	21.7 kg
Connector Type	MC4
Junction Box	IP68 with 3 Bypass Diodes
Cables	1200 mm x 2 ea
Glass	High Transmission Tempered Glass
Frame	Anodized Aluminium

Certifications and Warranty

Certifications	IEC 61215, IEC 61730-1/-2 UL 1703 IEC 61701 (Salt mist corrosion test) IEC 62716 (Ammonia corrosion test) ISO 9001
Module Fire Performance (USA)	Type 1
Fire Rating (CANADA)	Class C (ULC / ORD C1703)
Product Warranty	12 years
Output Warranty of Pmax	Linear warranty**

** 1) 1st year : 98%, 2) After 2nd year : 0.55% annual degradation, 3) 25 years : 84.8%

Temperature Characteristics

NOCT	45 ± 3 °C
Pmpp	-0.36%/°C
Voc	-0.26%/°C
Isc	0.02 %/°C

Characteristic Curves

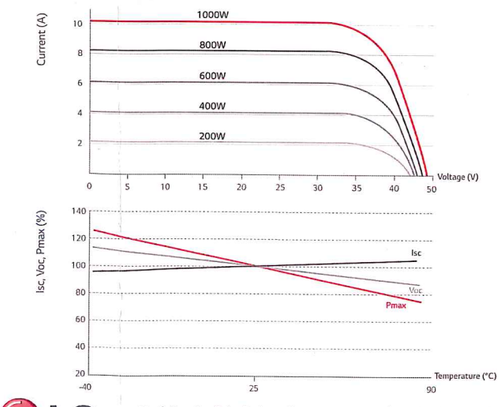

Electrical Properties (STC *)

Module	410W	405W	400W	395W
Maximum Power (Pmax)	410	405	400	395
MPP Voltage (Vmpp)	41.4	41.0	40.6	40.2
MPP Current (Impp)	9.91	9.89	9.86	9.83
Open Circuit Voltage (Voc)	49.5	49.4	49.3	49.2
Short Circuit Current (Isc)	10.55	10.51	10.47	10.43
Module Efficiency	19.8	19.5	19.3	19.1
Operating Temperature	-40 ~ +90			
Maximum System Voltage	1500 (UL)			
Maximum Series Fuse Rating	20			
Power Tolerance (%)	0 ~ +3			

* STC (Standard Test Condition): Irradiance 1,000 W/m², Ambient Temperature 25 °C, AM 1.5
* The nameplate power output is measured and determined by LG Electronics at its sole and absolute discretion.
* The Typical change in module efficiency at 200W/m² in relation to 1000W/m² is -2.0%.

Electrical Properties (NOCT*)

Module	410W	405W	400W	395W
Maximum Power (Pmax)	304	300	296	293
MPP Voltage (Vmpp)	38.3	38.0	37.6	37.2
MPP Current (Impp)	7.92	7.91	7.88	7.86
Open Circuit Voltage (Voc)	46.3	46.2	46.1	46.0
Short Circuit Current (Isc)	8.47	8.44	8.41	8.38

* NOCT (Nominal Operating Cell Temperature): Irradiance 800W/m², ambient temperature 20 °C, wind speed 1m/s

Dimensions (mm/in)

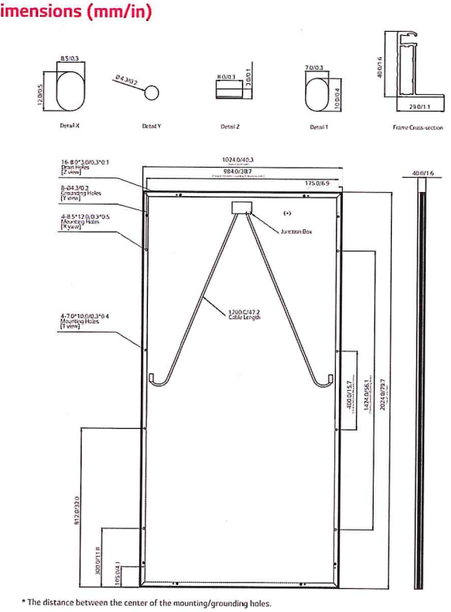

* The distance between the center of the mounting/grounding holes.

LG
Life's Good

North America Solar Business Team
LG Electronics U.S.A. Inc
1000 Sylvan Ave, Englewood Cliffs, NJ 07632

Contact: lg.solar@lge.com
www.lgsolarusa.com

Product specifications are subject to change without notice.

01/01/2017

Innovation for a Better Life

ALL ENERGY SOLAR

CONTRACTOR

ALL ENERGY SOLAR

PHONE: 8006203370
ADDRESS: 1642 CARROLL AVE
ST PAUL, MN 55104

NEW PV SYSTEM: 3.950 kWp

ERIK BERGER - 20586

662 CONWAY ST
ST PAUL, MN 55106
APN: 322922410076

ENGINEER OF RECORD

PAPER SIZE: 11" x 17" (ANSI B)

RESOURCE DOCUMENT

DATE: 2.6.2018
DESIGN BY: O.K.
CHECKED BY: M.M.

REVISIONS

R-001.00
(SHEET 12)

SERIES 100 UL ROOF MOUNT SYSTEM

SnapNrack Solar Mounting Solutions

The SnapNrack line of solar mounting solutions is designed to reduce total installation costs. The system's technical innovations have been proven to drive down costs and improve installation quality on more than 350 MW of solar installations.

Pitched Roof Arrays Simplified

The SnapNrack Series 100 UL Roof Mount System is an efficient, visually appealing, photovoltaic (PV) module installation system. Series 100 UL is Listed to the UL Standard 2703 for Bonding, meaning that all system components have been Certified by UL for electrical continuity, eliminating the need for additional grounding hardware. The System's components provide an adequate bonding path which has eliminated the need for grounding lugs and washers at each module, and bonding jumpers between splices. The UL 2703 Listing ensures that SnapNrack partners can provide the best in class installations in quality, safety, and efficiency.

- All bonding hardware is fully integrated into the components
- No grounding lugs required for modules
- Rail splices bond rails together, no rail jumpers required
- Proprietary SnapNrack grounding lug snaps in the rail channel, no drilling of rail or reaching for other tools required (One Lug per individual row of modules)
- Class A Fire Rating Type 1 and 2 modules

Patent Pending

Roof System in 4 Simple Steps:

1) Go to the online Series 100 Configuration Tool (configure.snapnrack.com) and select "Yes" for UL 2703 Listed

2) Identify Site Conditions (Array Tilt, Building Height, Roof Type, Wind and Snow Loads)

3) Build array in the online Configuration Tool and automatically generate a Bill of Materials.

4) Place order with your distributor. Purchase material for a single project or order in bulk for additional savings

UL LISTED
PV Mounting System
2703

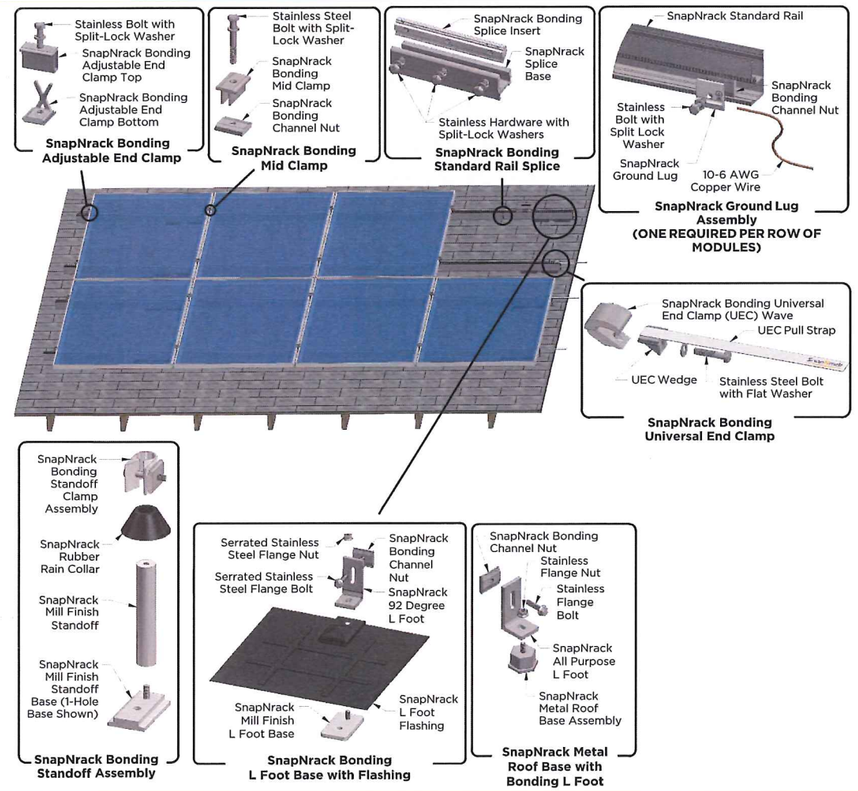

SnapNrack Series 100 UL Technical Data Patent Pending	
Materials	• 6000 Series aluminum • Stainless steel • Galvanized Steel and Aluminum Flashing
Material Finish	• Clear and black anodized aluminum • Mill Finish on select components
Installation	• Quick and efficient mounting • Adjustable hardware to ensure clean and level finish • All components bonded to ground with integrated bonding features
Calcs. & Certifications	• Listed to UL Standard 2703 for Grounding/Bonding and Fire Classification • Class A Fire Rating Type 1 and Type 2 Modules • Stamped Structural Engineering Reports for all 50 States
Grounding	• SnapNrack Grounding Lug (One Lug per individual row of modules)
Warranty	• 10 Year material and worksmanship (download full details at snapnrack.com)

SnapNrack™
Solar Mounting Solutions
(877) 732-2860 www.SnapNrack.com

ALL ENERGY SOLAR

CONTRACTOR

ALL ENERGY SOLAR

PHONE: 8006203370
ADDRESS: 1642 CARROLL AVE
ST PAUL, MN 55104

NEW PV SYSTEM: 3.950 kWp

ERIK BERGER - 20586

662 CONWAY ST
ST PAUL, MN 55106
APN: 322922410076

ENGINEER OF RECORD

PAPER SIZE: 11" x 17" (ANSI B)

RESOURCE DOCUMENT

DATE: 2.6.2018
DESIGN BY: O.K.
CHECKED BY: M.M.

REVISIONS

R-004.00
(SHEET 15)

SERIES 100 UL FLASHED L FOOT KIT

SnapNrack Solar Mounting Solutions

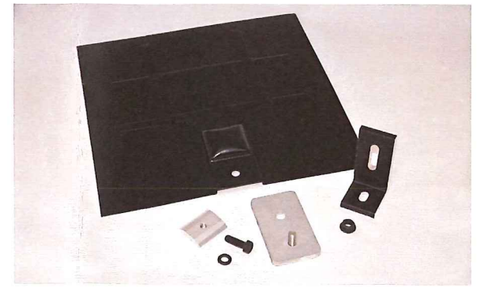

Flashed L Foot Kit Parts

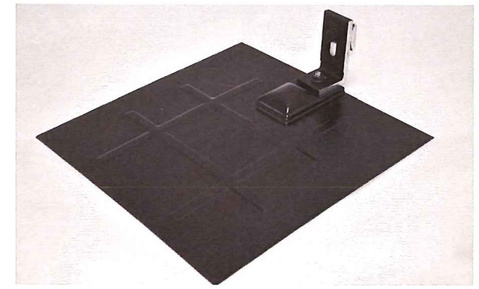

Flashed L Foot Kit Assembled

The SnapNrack line of solar mounting solutions is designed to reduce total installation costs. The system's technical innovations have been proven to drive down costs and improve installation quality on more than 350 MW of solar installations.

Flashed L Foot Simplified

SnapNrack Series 100 Flashed L Foot Kit is an innovative solution to provide a long lasting watertight seal over the life of the system. The Flashed L Foot provides a fully flashed roof fastener for attachment to composition roof with no required cutting of shingles. The L Foot is engineered for maximum adjustability for a clean level installation.

- 1" slotted bolt connection
- 1" spacers available for increased adjustability
- Clear or Black anodized aluminum components (both available with black flashing)
- No Cutting of shingles

Patent Pending

Flashed L Foot in 4 Simple Steps:

1) Locate a rafter in the roof using a pilot drill

2) Install base to the roof on top of the composition shingle

3) Use a breaker bar to separate the composition shingles above the base, and install the flashing

4) Attach the L foot on top and proceed with rail installation and leveling

Place order with your distributor. Purchase material for a single project or order in bulk for additional savings

UL LISTED
PV Mounting System
2703

Flashed L Foot Kit Assembly

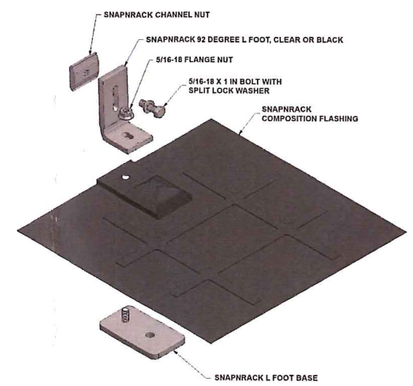

Flashed L Foot Kit Dimensions

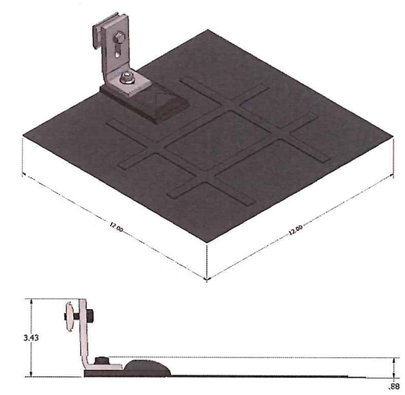

SnapNrack Flashed L Foot Technical Data Patent Pending	
Materials	• 6000 Series Aluminum L Foot & Base • Stainless Steel Hardware • Galvanized Steel Flashing w/ black all weather coating
Material Finish	• Clear and black anodized aluminum
Weight	• 1.3 lbs
Design Uplift Load	• 350 lbs Uplift
Design Ultimate Load	• 1,000 lbs Uplift
Warranty	• 10 Year material and worksmanship

SnapNrack™
Solar Mounting Solutions

(877) 732-2860 www.SnapNrack.com

Printed on recycled paper using soy based inks.

ALL ENERGY | SOLAR |

CONTRACTOR

ALL ENERGY SOLAR

PHONE: 8006203370
ADDRESS: 1642 CARROLL AVE
ST PAUL, MN 55104

NEW PV SYSTEM: 3.950 kWp

ERIK BERGER - 20586

662 CONWAY ST
ST PAUL, MN 55106
APN: 322922410076

ENGINEER OF RECORD

PAPER SIZE: 11" x 17" (ANSI B)

RESOURCE DOCUMENT

DATE: 2.6.2018
DESIGN BY: O.K.
CHECKED BY: M.M.

REVISIONS

R-005.00
(SHEET 16)

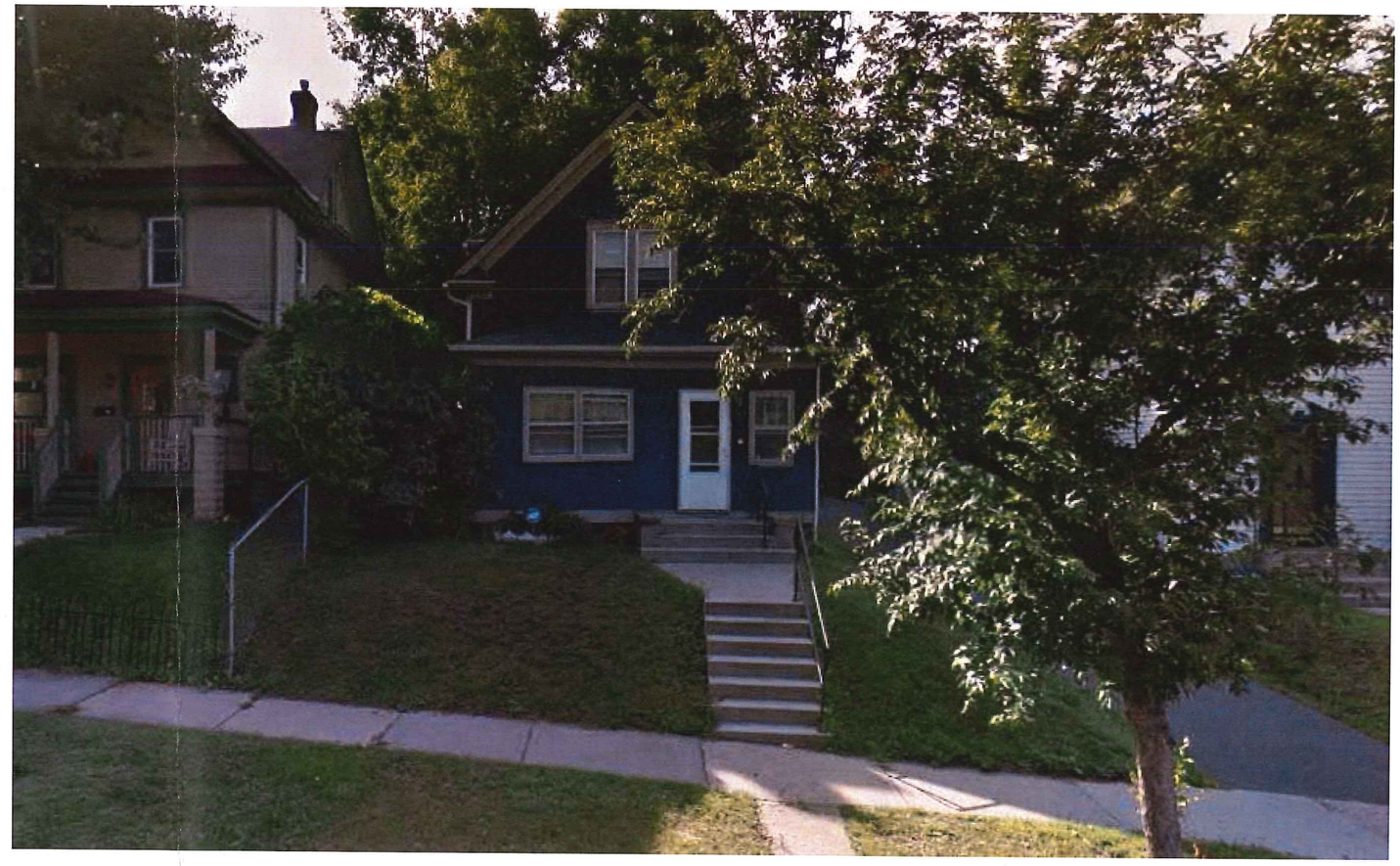

Gause, George (CI-StPaul)

From: Gause, George (CI-StPaul)
Sent: Thursday, March 22, 2018 8:12 AM
To: 'eabgmail'
Cc: kristensaes@gmail.com
Subject: RE: Solar proposal at 662 Conway

You have been tentatively scheduled for the Thursday, April 12, 2018 Heritage Preservation Commission meeting, which will be held in room 40 in the City Hall Conference Center (basement) 15 Kellogg Boulevard West.

Staff's final recommendation will come after formal review of the documentation, our staff meeting on the proposal, and completion of the staff brief to the Commission, a copy of which will be made available to you prior to the meeting.

More information about policies, procedures and application guides can be found at our website www.stpaul.gov/hpc
Please let me know if you have any questions.

George Gause
Heritage Preservation Supervisor
Planning & Economic Development
25 4th Street West, ste 1400
Saint Paul, MN 55102
P: 651-266-6714
george.gause@ci.stpaul.mn.us

The Most Livable City In America

From: eabgmail [mailto:erik.allen.berger@gmail.com]
Sent: Thursday, March 22, 2018 6:34 AM
To: Gause, George (CI-StPaul)
Cc: kristensaes@gmail.com
Subject: Re: Solar proposal at 662 Conway

put it on the docket for April 12th.

please send location of meeting and time.

Sent from iPhone 10

On Mar 21, 2018, at 4:11 PM, Gause, George (CI-StPaul) <George.Gause@ci.stpaul.mn.us> wrote:

> Staff is in receipt of an application for installation of solar panels on the roof structure at 662 Conway, which is located within the Dayton's Bluff Heritage District.

Staff can administratively approve solar installations behind the mid-point of the structure. As proposed, the system would be highly visible and would need Commission review.

As proposed staff could not recommend approval due to the visible nature of the system.

Please let me know if you have any questions or if you would like to schedule for a Commission meeting. Our next deadline is March 22 for the April 12 meeting.

<image001.jpg>**George Gause**
Heritage Preservation Supervisor
Planning & Economic Development
25 4th Street West, ste 1400
Saint Paul, MN 55102
P: 651-266-6714
george.gause@ci.stpaul.mn.us

<image002.png><image003.png><image005.jpg>