AUGUSTUS CORNER

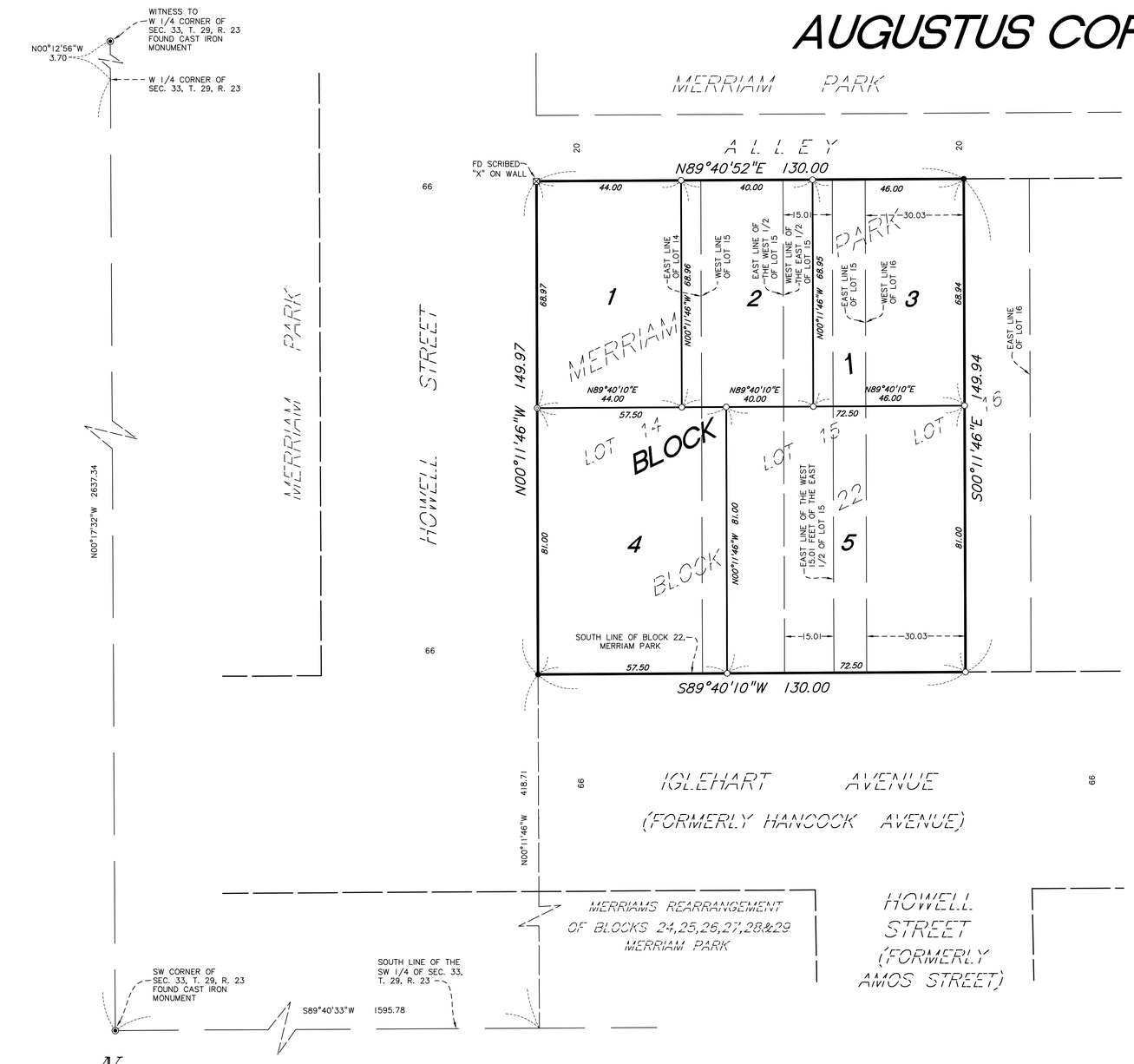

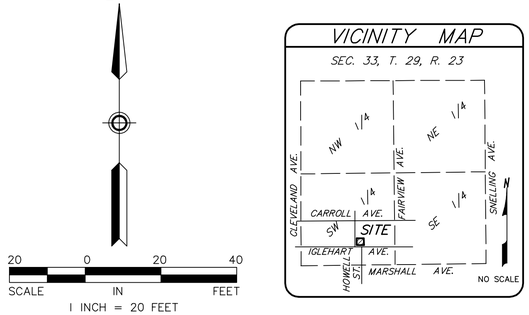

FOR THE PURPOSES OF THIS PLAT THE SOUTH LINE OF BLOCK 22, MERRIAM PARK IS ASSUMED TO HAVE A BEARING OF S89°40'10"W.

○ DENOTES 1/2 INCH BY 14 INCH IRON PIPE MONUMENT SET AND MARKED BY LICENSE NO. 44900.

◎ DENOTES 1.17 INCH DIAMETER COPPER MAGNETIZED MARKER WITH DISC CAP AFFIXED STAMPED LS-44900 SET

● DENOTES FOUND 1/2 INCH IRON PIPE MONUMENT AND MARKED BY LICENSE NO. 44900.

◉ DENOTES FOUND CAST IRON MONUMENT

COUNTY RECORDER, COUNTY OF RAMSEY, STATE OF MINNESOTA

I hereby certify that this plat of AUGUSTUS CORNER was filed in the office of the County Recorder for public record on this _____ day of _____, 20___, at _____ o'clock __.M., and was duly filed in Book _____ of Plats, Page _____, as Document Number _____.

_____
Deputy County Recorder

REGISTRAR OF TITLES, COUNTY OF RAMSEY, STATE OF MINNESOTA

I hereby certify that this plat of AUGUSTUS CORNER was filed in the office of the Registrar of Titles for public record on this _____ day of _____, 20___, at _____ o'clock __.M., and was duly filed in Book _____ of Plats, Page _____, as Document Number _____.

_____
Deputy Registrar of Titles

KNOW ALL MEN BY THESE PRESENTS: That 1905 Iglehart, LLC, a Minnesota limited liability company, owner of the following described property situated in the City of Saint Paul, County of Ramsey, State of Minnesota:

Lot 14, Block 22, Merriam Park, according to the recorded plat thereof, Ramsey County, Minnesota.

And

The west half of Lot 15, Block 22, Merriam Park, according to the recorded plat thereof, Ramsey County, Minnesota.

And

The west 15.01 feet of the east half of Lot 15, Block 22, Merriam Park, according to the recorded plat thereof, Ramsey County, Minnesota.

And

That part of the east half of Lot 15, Block 22, Merriam Park, according to the recorded plat thereof, Ramsey County, Minnesota, lying east of the west 15.01 feet of said East Half of said Lot 15.

And

The west 30.03 feet of Lot 16 said Block 22.

Has caused the same to be surveyed and platted as AUGUSTUS CORNER.

In witness whereof said 1905 Iglehart, LLC, a Minnesota limited liability company, has caused these presents to be signed by its proper officer this _____ day of _____, 20___.

Signed: 1905 Iglehart, LLC

_____, its _____

STATE OF _____
COUNTY OF _____

The foregoing instrument was acknowledged before me this _____ day of _____, 20___, by _____, its _____, of 1905 Iglehart, LLC, a Minnesota limited liability company, on behalf of said company.

_____
_____
Notary Public, _____
My Commission Expires _____

I, Arlee J. Carlson, do hereby certify that I have surveyed or directly supervised the survey of the property described on this plat; prepared this plat or directly supervised the preparation of this plat; that this plat is a correct representation of the boundary survey; that all mathematical data and labels are correctly designated on this plat; that all monuments depicted on this plat have been correctly set; that all water boundaries and wet lands, as defined in Minnesota Statutes, Section 505.01, Subd. 3, as of the date of the surveyor's certification are shown and labeled on this plat; and all public ways are shown and labeled on this plat.

Dated this _____ day of _____, 20___.

_____
Arlee J. Carlson, Professional Land Surveyor
Minnesota License No. 44900

STATE OF MINNESOTA
COUNTY OF _____

The foregoing Surveyor's Certificate was acknowledged before me this _____ day of _____, 20___, by Arlee J. Carlson, a Professional Land Surveyor.

_____
_____
Notary Public, Minnesota
My Commission Expires January 31, 20___

CITY OF SAINT PAUL, MINNESOTA

I do hereby certify that on the _____ day of _____, 20___, the City Council of the City of Saint Paul, Minnesota, approved this plat.

Signed: _____, Clerk

PROPERTY TAX, RECORDS AND ELECTION SERVICES DEPARTMENT

Pursuant to Minnesota Statutes, Section 505.021, Subd. 9, taxes payable in the year 20___ on the land hereinbefore described have been paid. Also, pursuant to Minnesota Statutes, Section 272.12, there are no delinquent taxes and transfer entered this _____ day of _____, 20___.

_____, Ramsey County Auditor/Treasurer

By _____, Deputy

COUNTY SURVEYOR

Pursuant to Minnesota Statutes, Section 383A.42, this plat is approved this _____ day of _____, 20___.

_____
Daniel D. Baar, L.S. Ramsey County Surveyor

SUNDE LAND SURVEYING